4-1000 CONTROL CIRCUIT

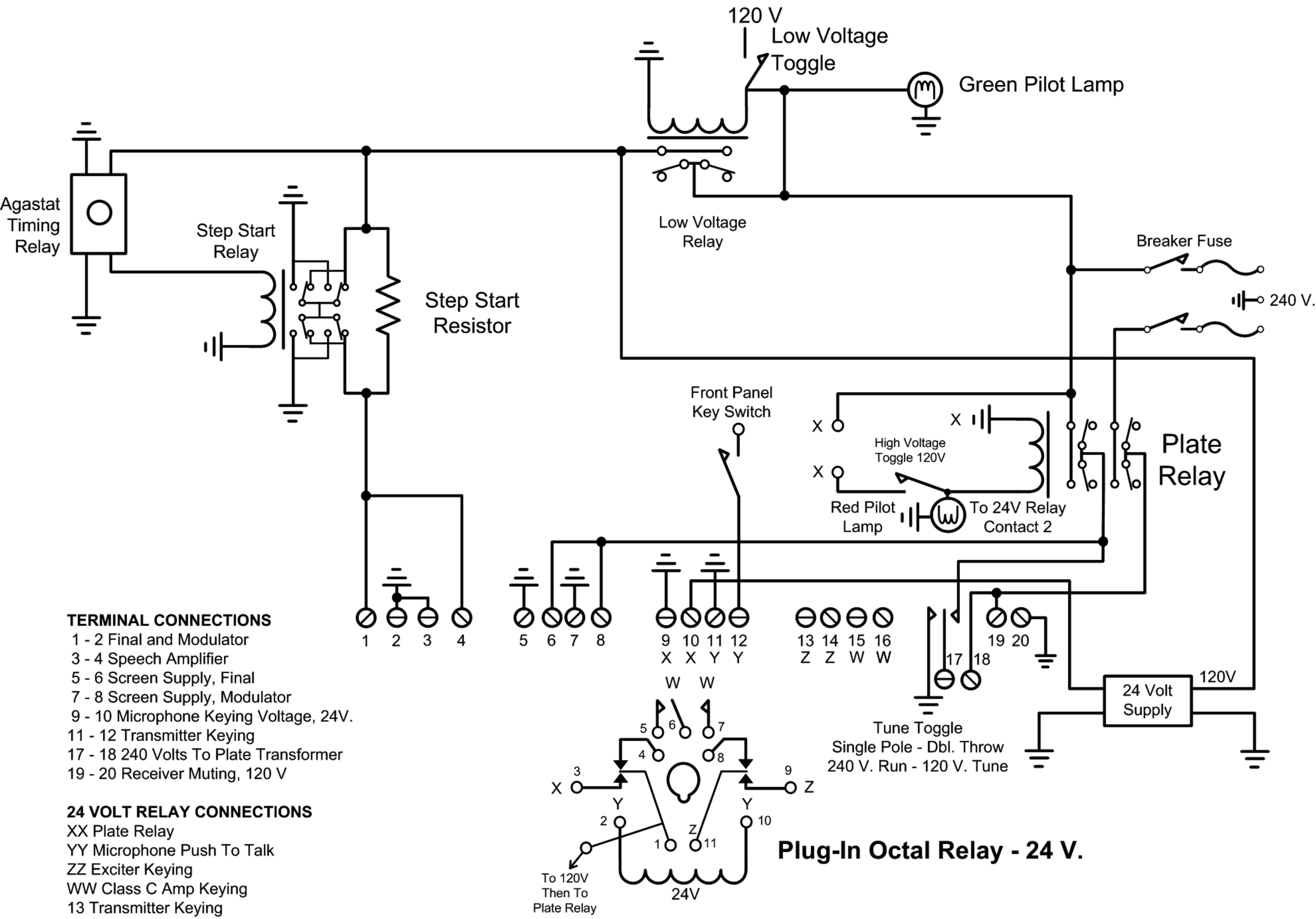

TERMINAL CONNECTIONS

1 - 2 Final and Modulator
3 - 4 Speech Amplifier
5 - 6 Screen Supply, Final
7 - 8 Screen Supply, Modulator
9 - 10 Microphone Keying Voltage, 24V.
11 - 12 Transmitter Keying
17 - 18 240 Volts To Plate Transformer
19 - 20 Receiver Muting, 120 V

24 VOLT RELAY CONNECTIONS

XX Plate Relay
YY Microphone Push To Talk
ZZ Exciter Keying
WW Class C Amp Keying
13 Transmitter Keying

Drawn by W9TZ