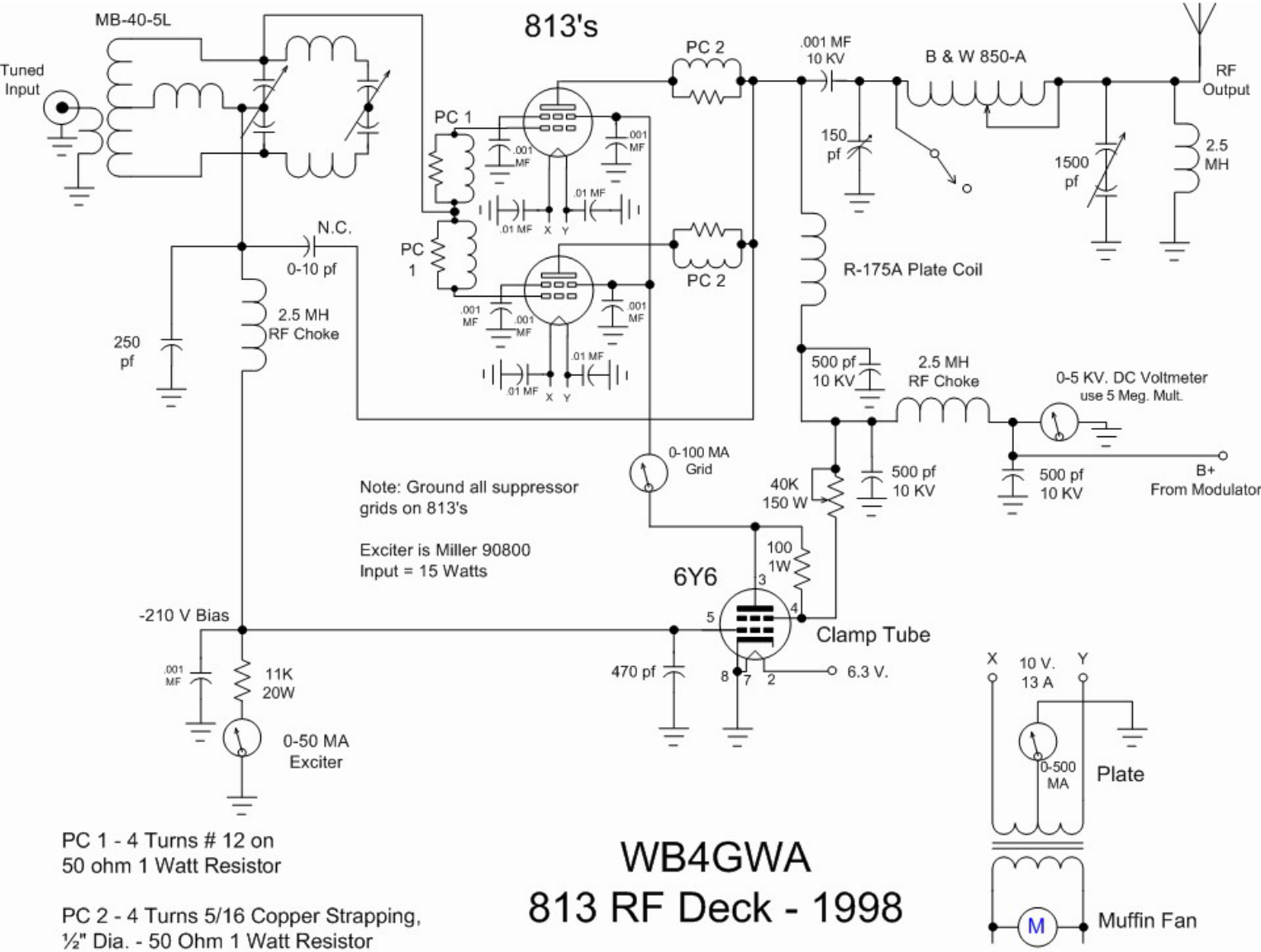

PC 1 - 4 Turns # 12 on
50 ohm 1 Watt Resistor

PC 2 - 4 Turns 5/16 Copper Strapping,
½" Dia. - 50 Ohm 1 Watt Resistor

WB4GWA
813 RF Deck - 1998